**BODY, GRAB BAR, PASSENGER - Z26SPD92AN/AH/BN/BH (C750082)**

**2026 RZR - RZR PRO S ULTIMATE (R01) - Z26SPD92AN/AH/BN/BH**

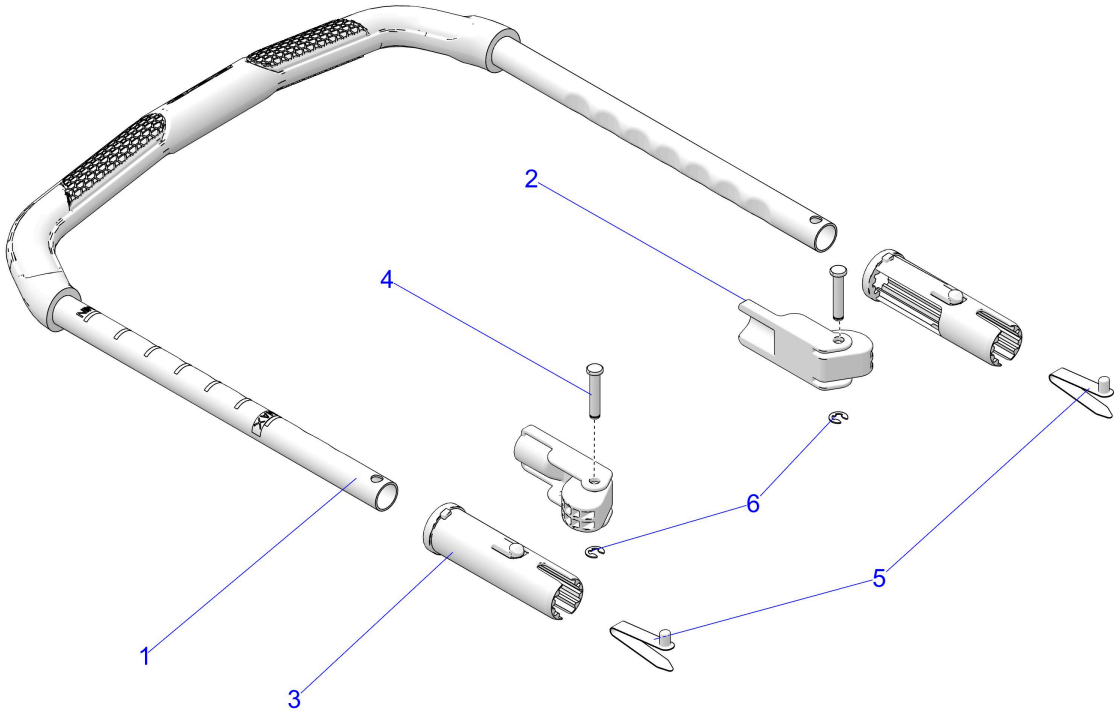


© 2024 Polaris Industries Inc.

C750082

| *Reference #* | *Part#* | *Description* | *Quantity* |
|---|---|---|---|
| 1 | 2639917 | ASM-GRAB BAR,PASSENGER | 1 |
| 2 | 5465237 | CAM-GRAB BAR | 2 |
| 3 | 5456486 | BUSHING-GRAB BAR | 2 |
| 4 | 7662365 | PIN-GRAB BAR | 2 |
| 5 | 7662425 | PIN-LOCK,GRAB BAR | 2 |
| 6 | 7710568 | E-CLIP-M5,SS,0600101 | 2 |

Copyright 1996-2026 Polaris Industries U.S.A All rights reserved.